SDR DSP base board

version 2 proto

Page:

Note: component numbering runs as: <prefix><sheet_number><sequence_number>
where <sheet_number> is always 2 decimal digits, while <sequence_number> has _at_least_ two digits.

Front page

sdr-dsp-2
8/14/2005 15:29:22
Sheet: 1/9

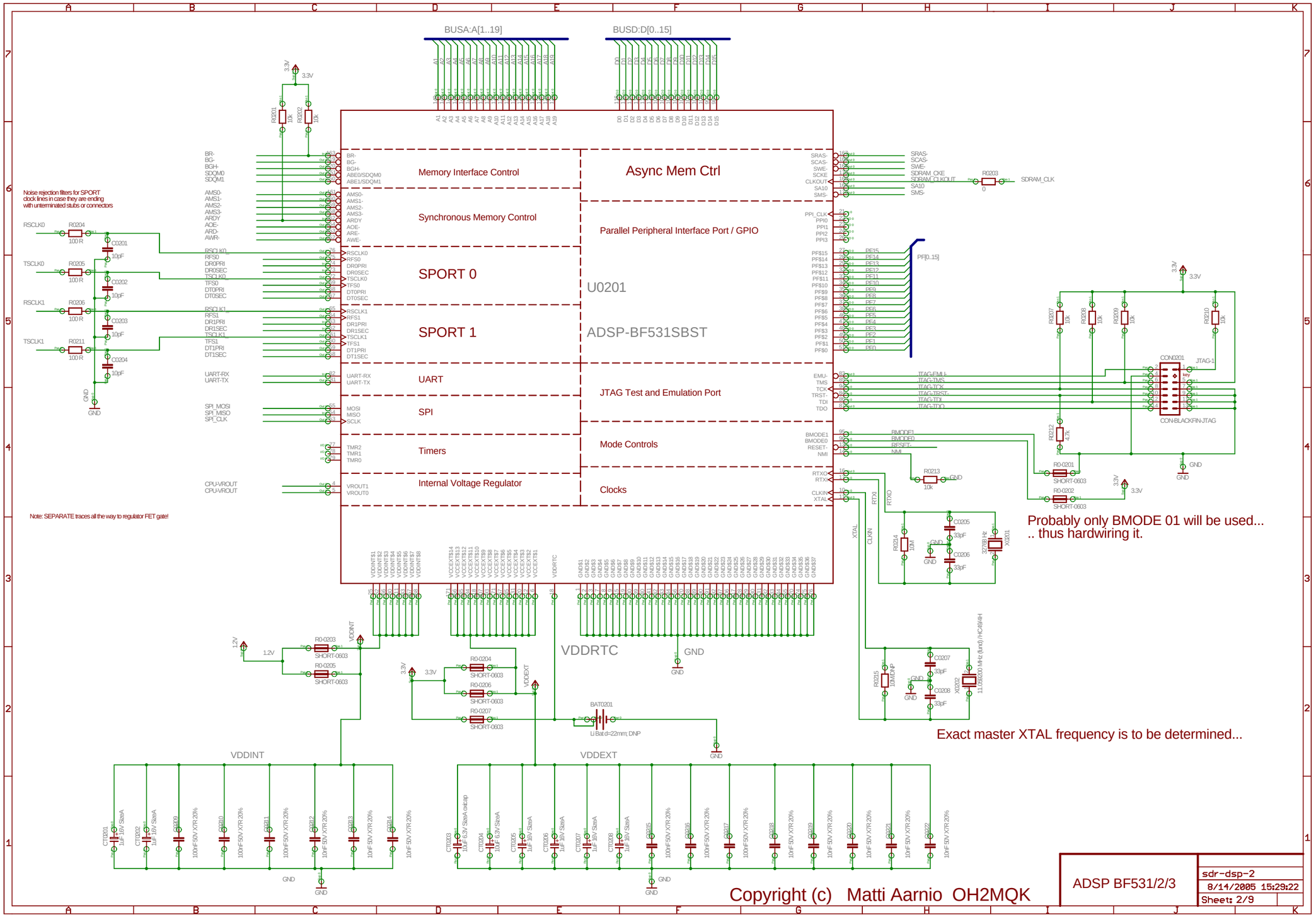

8/14/2005 15:29:33 f=0.66 /home/mea/eagle/sdr/sdr-dsp-2.sch (Sheet: 2/9)

MAX SDRAM: 128 MB !

Equip with: 8Mx8 memories, total 16 MB

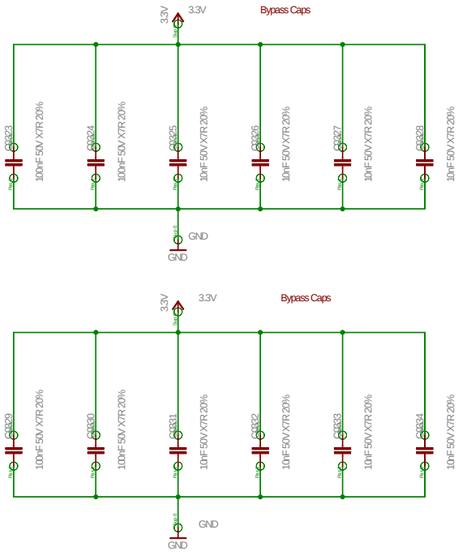

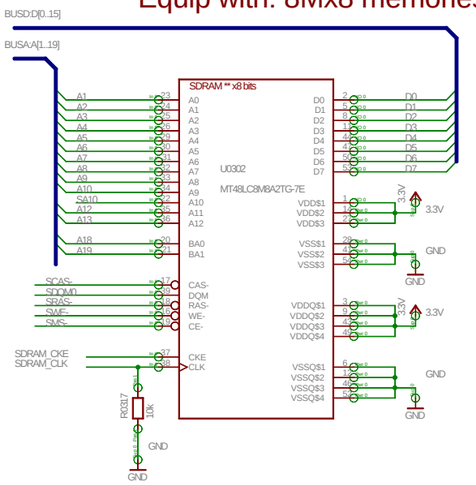

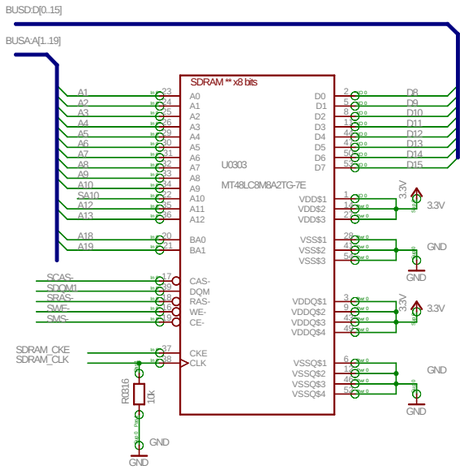

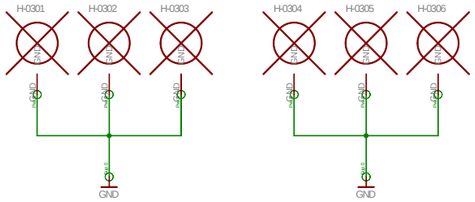

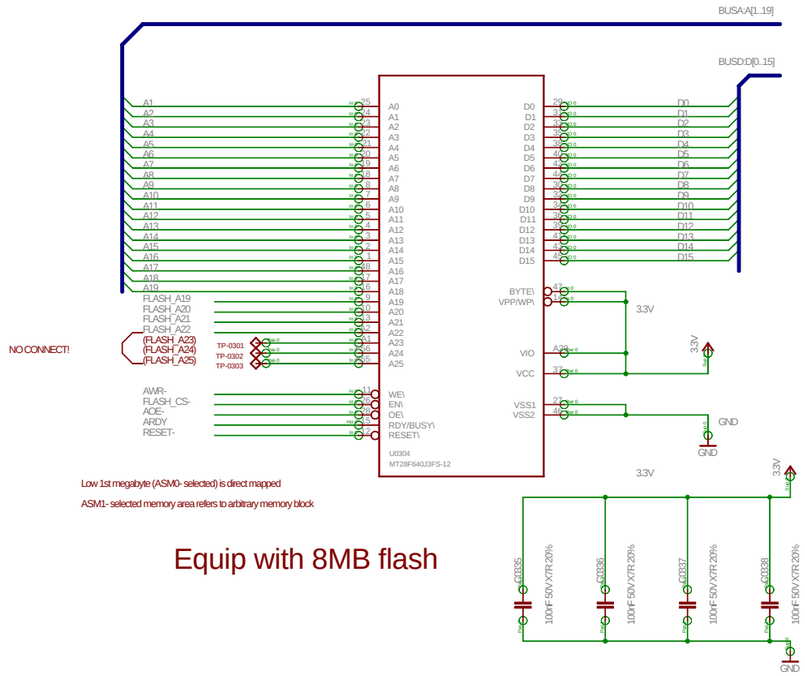

Equip with 8MB flash

SDRAM max 128 MB

FLASH max 16 MB

sdr-dsp-2

8/14/2005 15:29:22

Sheet: 3/9

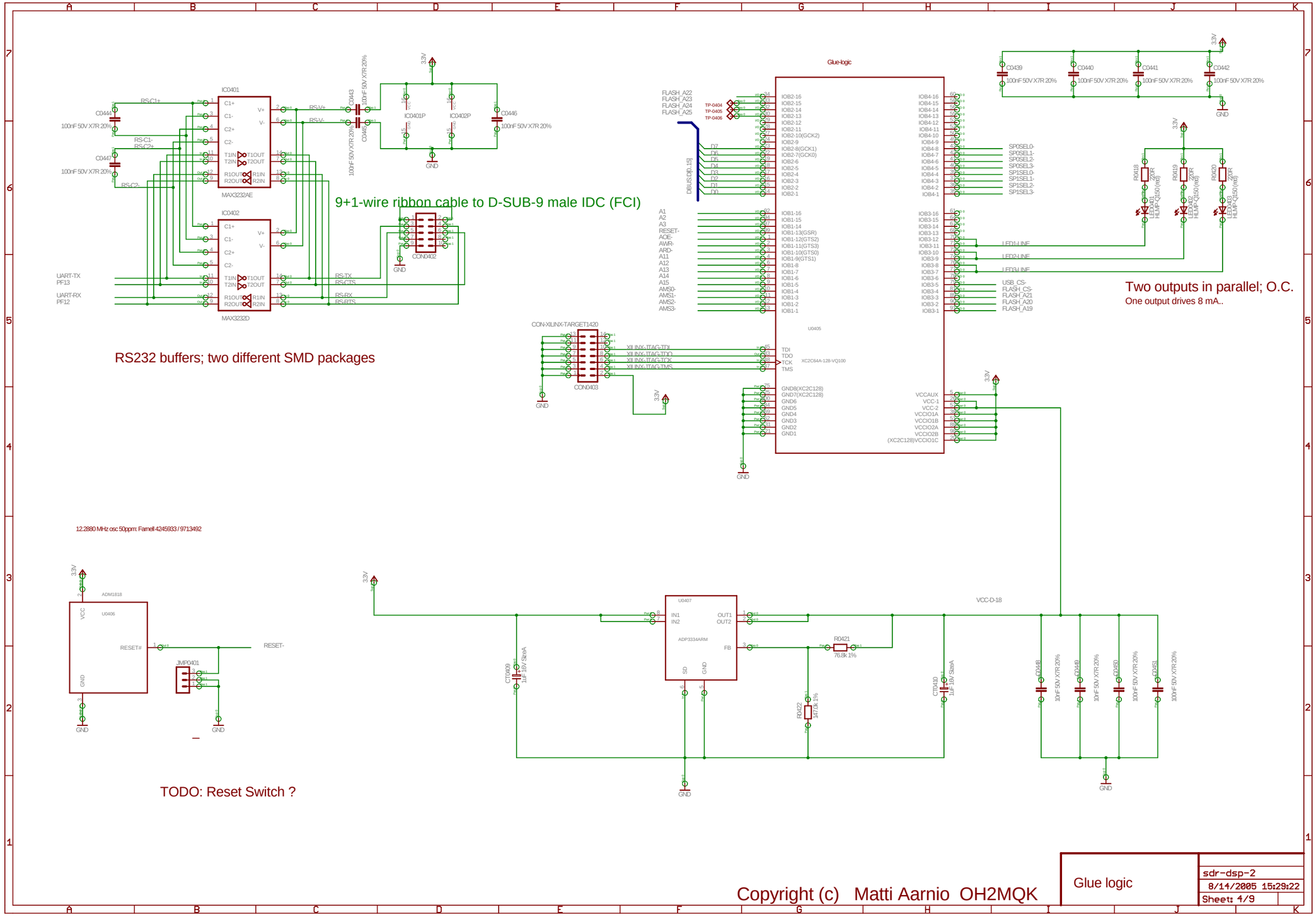
9+1-wire ribbon cable to D-SUB-9 male IDC (FCI)
RS232 buffers; two different SMD packages
Two outputs in parallel; O.C.
One output drives 8 mA..
TODO: Reset Switch ?
12.2880 MHz osc 50ppm: Farnell 4245933 / 9713492
Glue-logic
Copyright (c) Matti Aarnio OH2MQK
Glue logic
sdr-dsp-2
8/14/2005 15:29:22
Sheet: 4/9

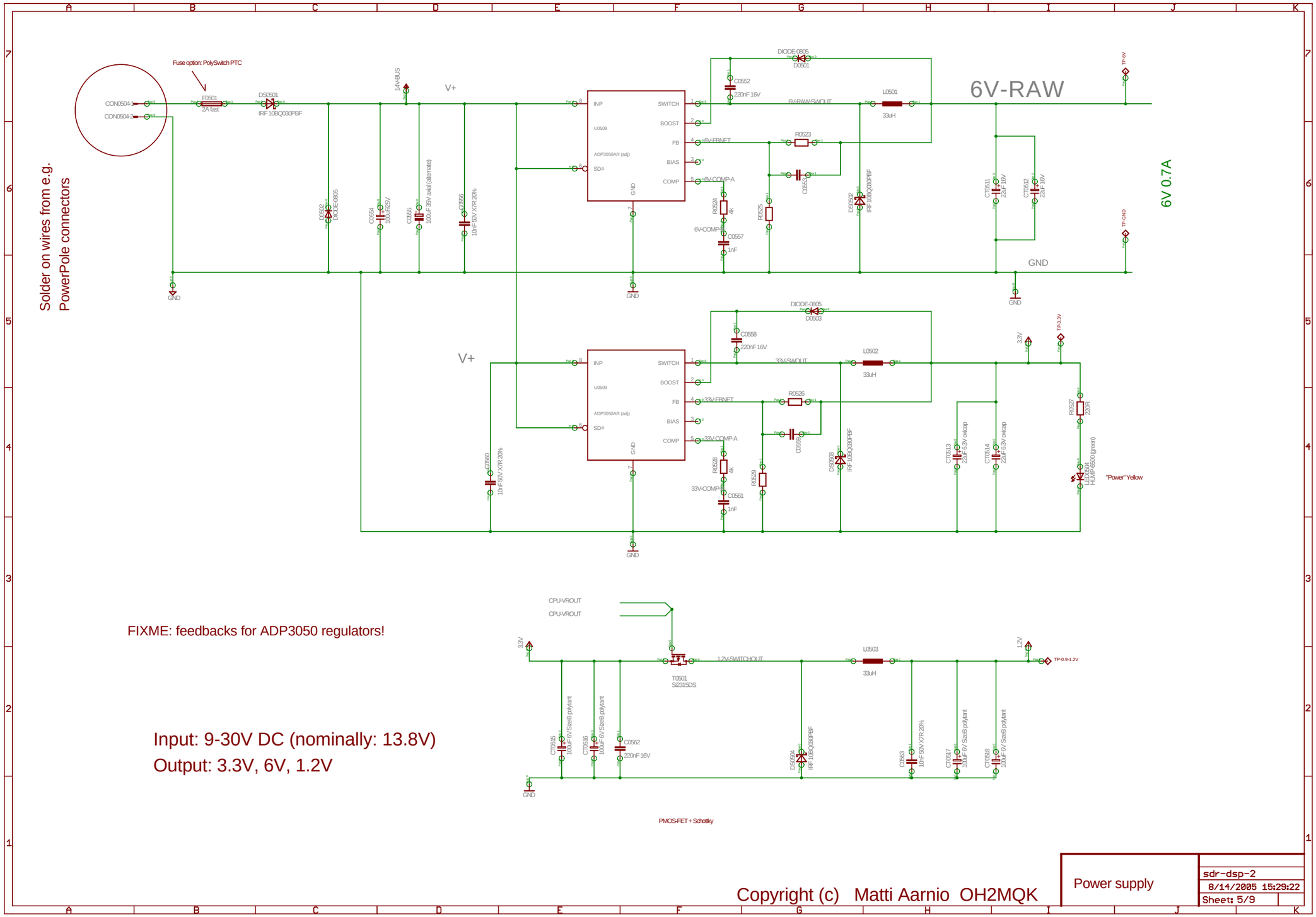

FIXME: feedbacks for ADP3050 regulators!

Input: 9-30V DC (nominally: 13.8V)
Output: 3.3V, 6V, 1.2V

Power supply	sdr-dsp-2
	8/14/2005 15:29:22
	Sheet: 5/9

SPORT connectors

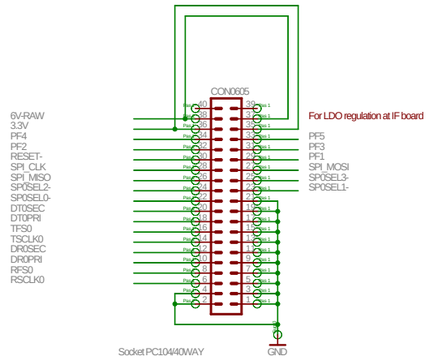

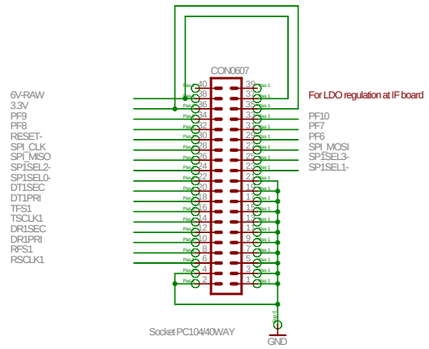

Compact Flash socket

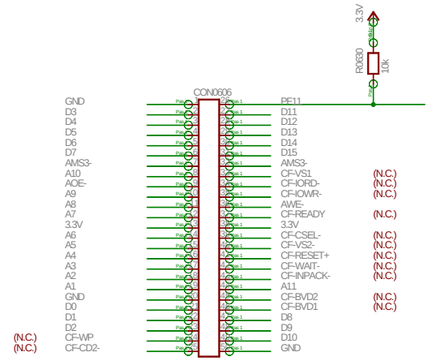

3M N7E50-7516-VY (+ 3503-34 ?)

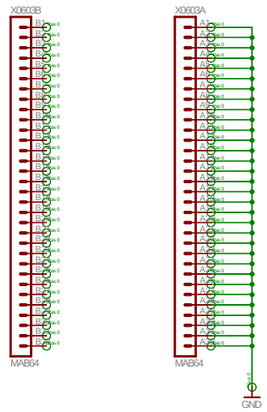

SPORT connectors	sdr-dsp-2
CFLASH socket	8/14/2005 15:29:22
	Sheet: 6/9

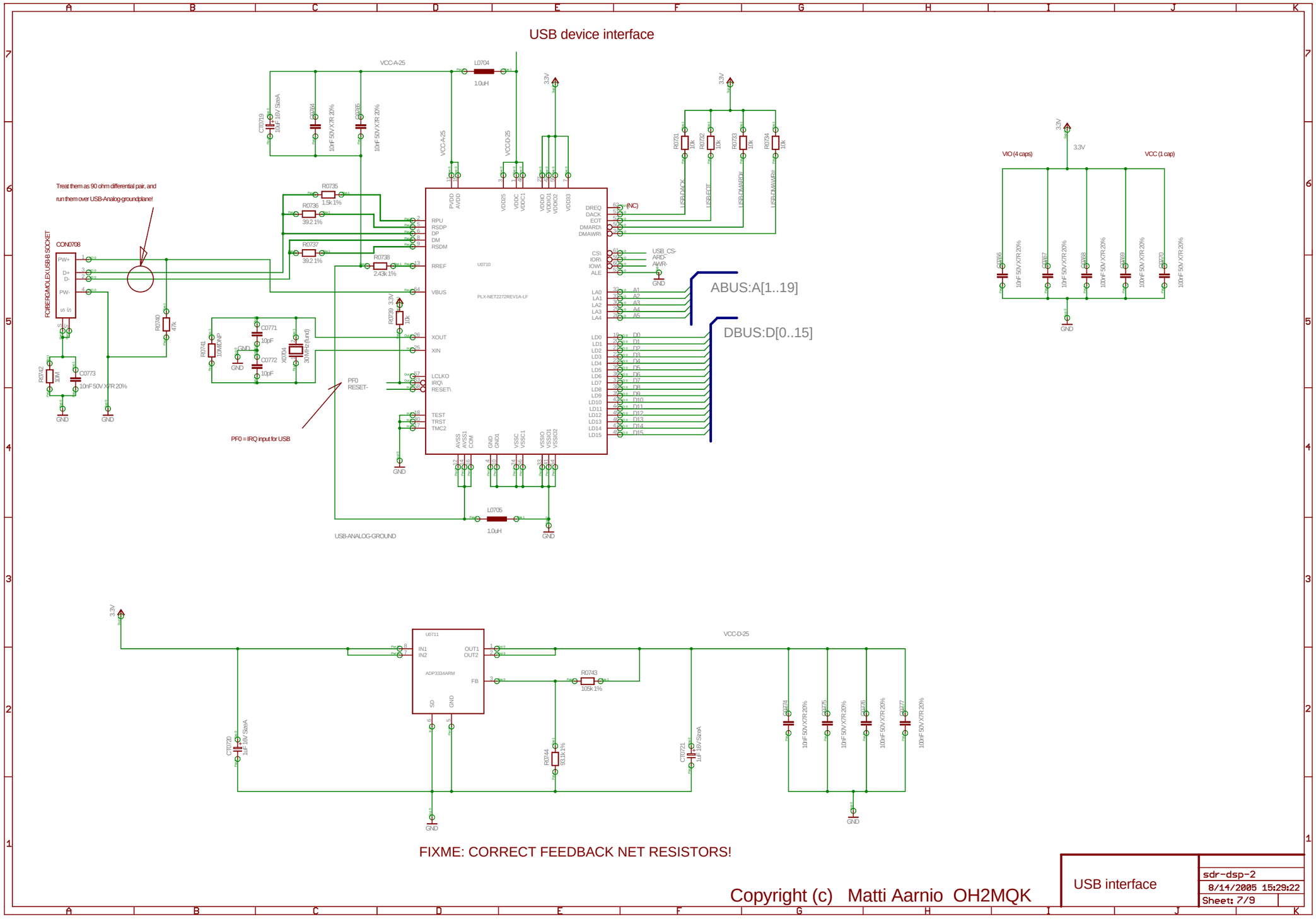
USB device interface
Treat them as 90 ohm differential pair, and
run them over USB-Analog-groundplane!
CON0708
FCIBERGMOLEXUSB-B SOCKET
PW+
D+
D-
PW-
PF0 = IRQ input for USB
PF0
RESET-
U0710
PLX-NET2272REV1A-LF
RPU
RSDP
DP
DM
RSDM
RREF
VBUS
XOUT
XIN
LCLKO
IRQ\
RESET\
TEST
TRST
TMC2
DREQ
DACK
EOT
DMARD\
DMAWR\
CS\
IOR\
IOW\
ALE
LA0
LA1
LA2
LA3
LA4
LD0
LD1
LD2
LD3
LD4
LD5
LD6
LD7
LD8
LD9
LD10
LD11
LD12
LD13
LD14
LD15
ABUS:A[1..19]
DBUS:D[0..15]
USB_CS-
ARD-
AWR-
(NC)
VCC-A-25
VCC-D-25
L0704
1.0uH
L0705
1.0uH
USB-ANALOG-GROUND
3.3V
GND
VIO (4 caps)
VCC (1 cap)
U0711
ADP3334ARM
IN1
IN2
OUT1
OUT2
FB
SD
GND
R0743
105K 1%
R0744
93.1K 1%
C0720
1uF 16V SizeA
C0721
1uF 16V SizeA
FIXME: CORRECT FEEDBACK NET RESISTORS!
Copyright (c) Matti Aarnio OH2MQK
USB interface
sdr-dsp-2
8/14/2005 15:29:22
Sheet: 7/9

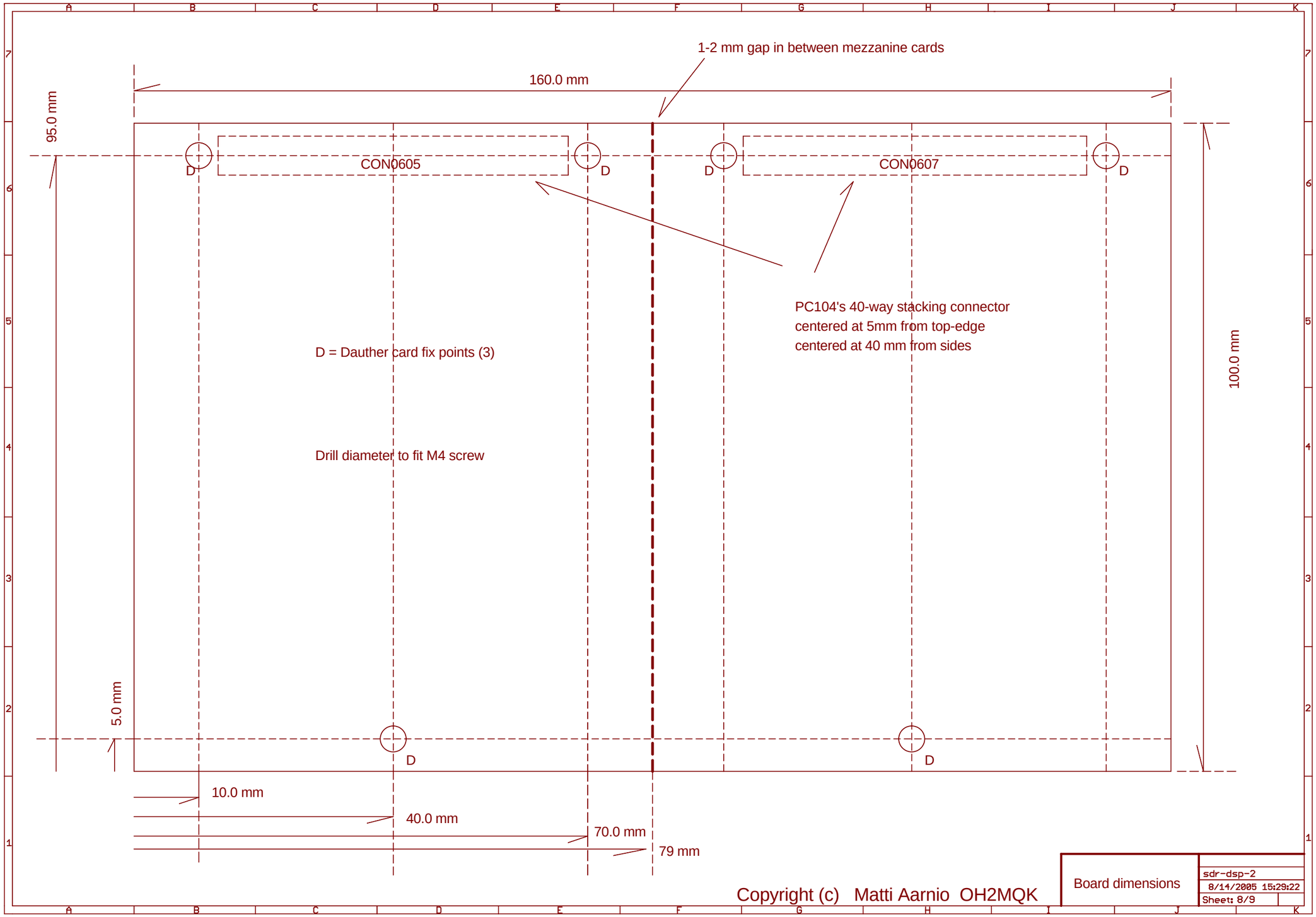
1-2 mm gap in between mezzanine cards
160.0 mm
95.0 mm
CON0605
CON0607
D
PC104's 40-way stacking connector
centered at 5mm from top-edge
centered at 40 mm from sides
D = Dauther card fix points (3)
Drill diameter to fit M4 screw
100.0 mm
5.0 mm
10.0 mm
40.0 mm
70.0 mm
79 mm
Copyright (c) Matti Aarnio OH2MQK
Board dimensions
sdr-dsp-2
8/14/2005 15:29:22
Sheet: 8/9

SDR-DSP stack, front edge on

Using Schroff 3U 10HP HE-series sub-module

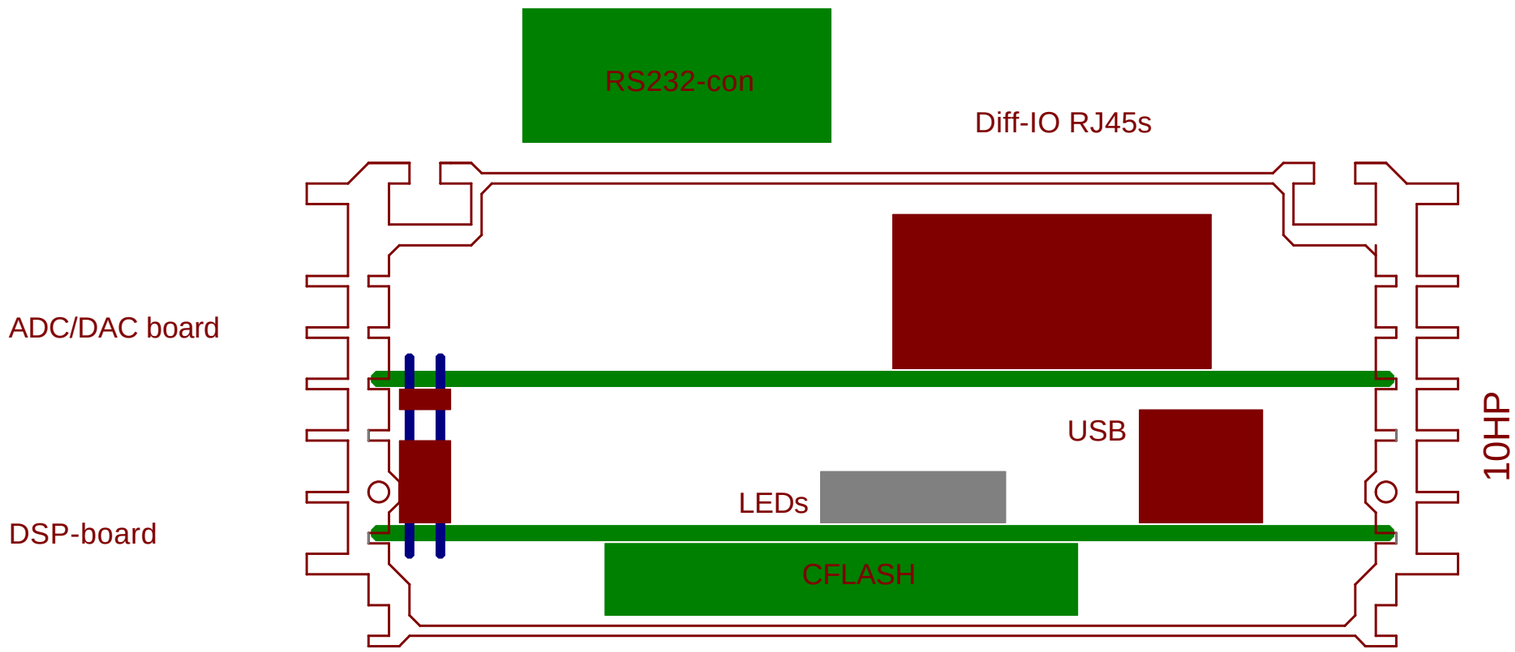

sdr-dsp-2
8/14/2005 15:29:22
Sheet: 9/9